FED. SUP CLASS
66GP

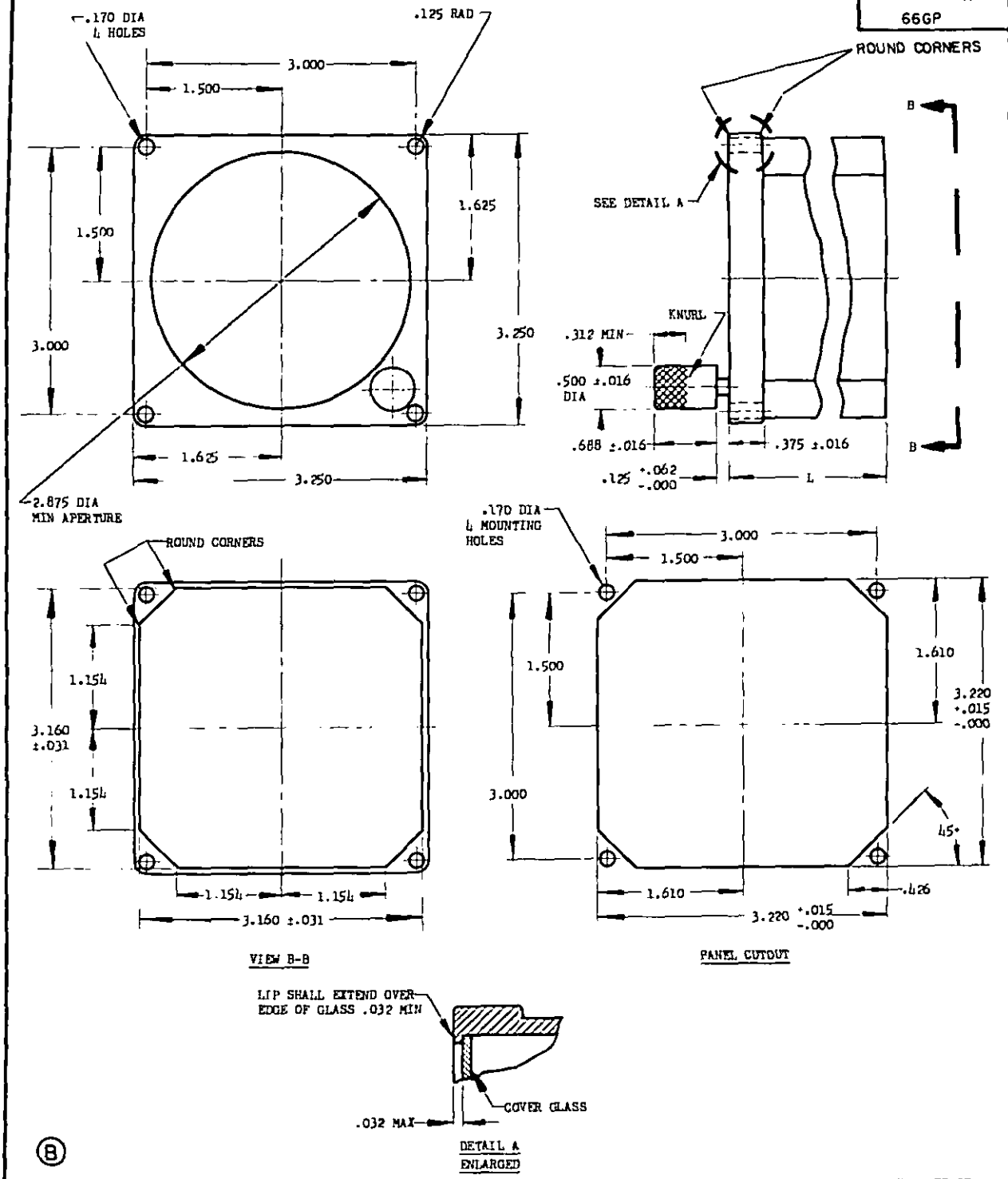

(B)

FRONT AND REAR MOUNTING FACES SHALL BE FLAT WITHIN ±.005. FOR LENGTH L, SEE DETAIL INSTRUMENT SPECIFICATION. THE ORDER OF PREFERENCE FOR ADJUSTING KNOB OR SCREW LOCATIONS ARE AS FOLLOWS: LOWER RIGHT HAND, LOWER LEFT HAND, AND UPPER RIGHT HAND. DIMENSIONS IN INCHES. UNLESS OTHERWISE SPECIFIED, TOLERANCES: DECIMALS ±.101.

CERTAIN PROVISIONS OF THIS DOCUMENT ARE SUBJECT TO INTERNATIONAL STANDARDIZATION AGREEMENT ASCC AIR STD 10/7F AND STANAG 3319 EDITION 6. WHEN AMENDMENT, REVISION, OR CANCELLATION OF THIS DOCUMENT IS PROPOSED WHICH WILL MODIFY THE INTERNATIONAL AGREEMENT CONCERNED, THE PREPARING ACTIVITY TAKES APPROPRIATE ACTION THROUGH INTERNATIONAL STANDARDIZATION CHANNELS INCLUDING DEPARTMENTAL STANDARDIZATION OFFICES TO CHANGE THE AGREEMENT OR MAKE OTHER APPROPRIATE ACCOMMODATIONS.

THIS IS A DESIGN STANDARD. NOT USED AS A PART NUMBER.

APPROVED 25 JUN 54 REVISED (A) 1 DEC 54 (B) 10 May 84

P. A.	INTERNATIONAL INTEREST	TITLE	MILITARY STANDARD
AIR FORCE - 82 Other Cust NAVY - AS AIR FORCE - 99 (B)	STANAG 3319 EDITION 6 (B)	(B) HOUSING, INDICATOR	MS 33556 (ASG)
PROCUREMENT SPECIFICATION	SUPERSEDES:		SHEET 1 OF 1

DD FORM (MAY 71) 672-1 (COORDINATED) PREVIOUS EDITIONS OF THIS FORM ARE OBSOLETE

66GP-002

USER ACTIVITIES AF 71

REVIEWER ACTIVITIES

This military standard is approved for use by all Departments and Agencies of the Department of Defense. Selection for all new engineering and design applications and for repetitive use shall be made from this document.